GLENDALE, ARIZONA

HI-TACAN RWY 3L

TACAN LUF Chan 77	APCH CRS 032°	Rwy ldg 10,012 TDZE 1077 Arpt Elev 1085	JAL-321 [USAF]	LUKE AFB (KLUF)

* Circling not authorized E of Rwy 03L-21R.

MISSED APPROACH: Track heading 030° to 4000, intercept LUF R-030 to JOKVI (LUF R-030/12 DME). Ctc LUKE APP CON.

ATIS ★	LUKE APP CON	LUKE TOWER ★	GND CON	CLNC DEL
134.925 269.9	118.15 363.12	119.1 379.9	133.175 335.8	126.25 273.475

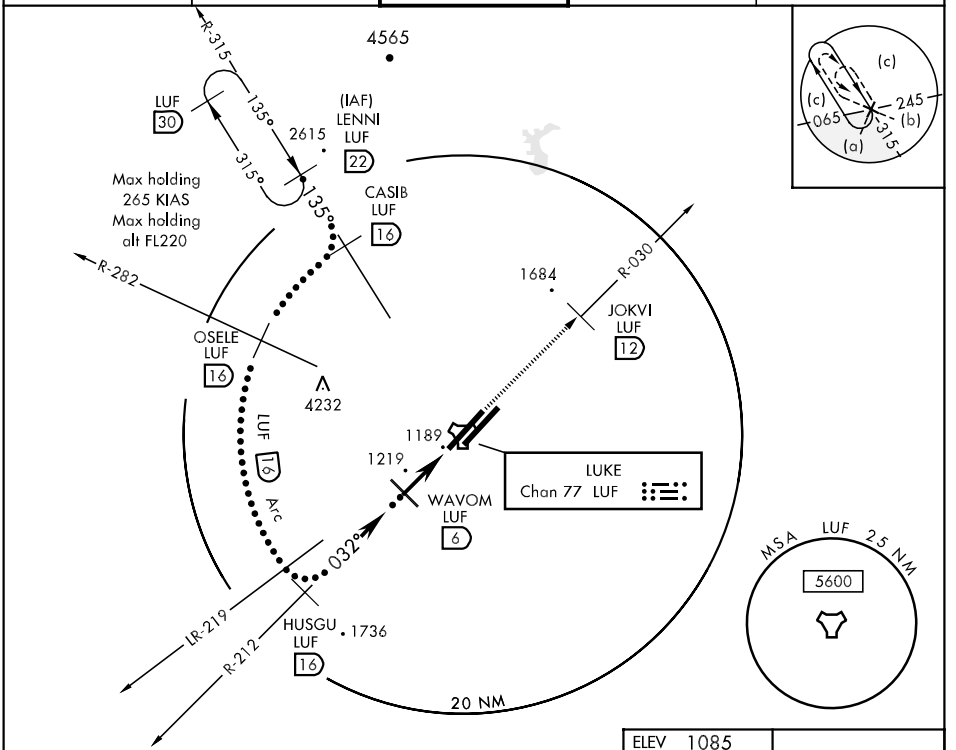

EMERG SAFE ALT 100 NM 16,200

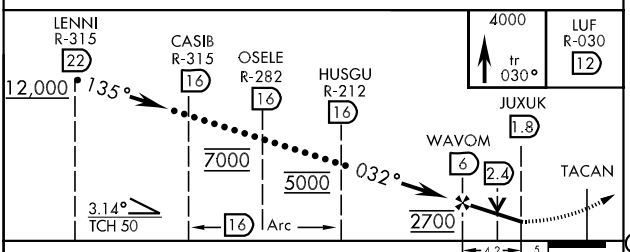

CATEGORY	C	D	E
S-3L	1500-1¼ 423 (500-1¼)		1500-1½ 423 (500-1½)
CIRCLING *	1560-1½ 475 (500-1½)	1640-2 555 (600-2)	NOT AUTHORIZED

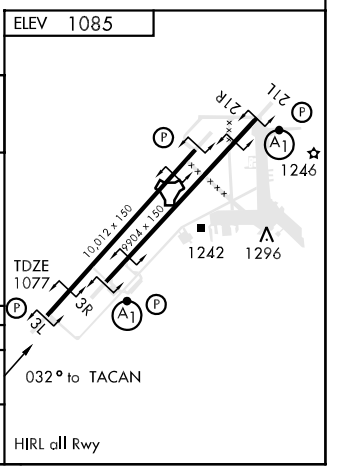

SW-4, 22 OCT 2009 to 19 NOV 2009

SW-4, 22 OCT 2009 to 19 NOV 2009

GLENDALE, ARIZONA 33°32′N-112°23′W LUKE AFB (KLUF)

Amdt 1 09211

HI-TACAN RWY 3L